G 101

DUCTILE IRON BUTTERFLY VALVE
WAFER SEMI-LUGGED TYPE WITH LEVER

Conforms to MSS SP-67

www.ecivalve.it



Specifications:

- WAFER SEMI-LUGGED TYPE BUTTERFLY VALVE WITH LEVER AND ISO 5211 MOUNTING PAD
- END CONNECTION SUITABLE FOR FLANGE CONNECTION ANSI B16.5 CLASS 150 OR PN16
- PRESSURE RATING 150 PSI /16 BAR
- DESIGNED & MANUFACTURED TO MEET MSS SP-67 STANDARD
- NOT SUITABLE FOR STEAM
- TEST & INSPECTION ACCORDING TO API 598
- SUITABLE MEDIA: FRESH WATER, SEWAGE, SEA WATER, AIR, OIL, ACID & CORROSIVE MEDIA
- WORKING TEMPERATURE FROM -10 °C TO +110°C / 14°F TO +230°F
- STANDARD DISC IN STAINLESS STEEL CF8/CF8M, EPDM SEAT
- DUCTILE IRON & ALUMINUM BRONZE DISC OPTIONS
- NITRILE & VITON SEAT LINER OPTIONS
- COATING: FUSION BONDED EPOXY (FBE), DFT ≥ 250 µm.

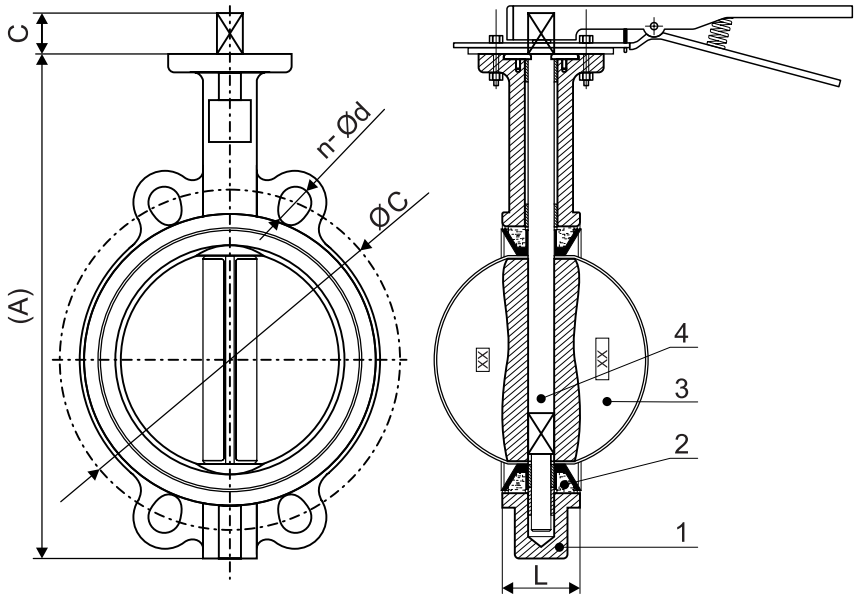

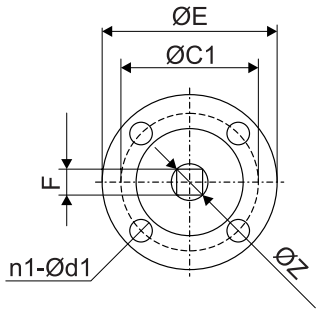

Dimensions (mm)

DN	INCH	L	A	F	ØZ	ANSI 150		DIN 2501 PN16		ISO 5211 Mounting Pad				WEIGHT GEAR (KG)
						Ø C	n-Ød	Ø C	n-Ød	Top Flange	ØE	ØC1	n1-Ød1	
50	2"	43	195	9x9	12.6	121	4-Ø19	125	4-Ø19	F05	65	50	4-Ø8	3.5
65	2 1/2"	46	232	9x9	12.6	140	4-Ø19	145	4-Ø19	F05	65	50	4-Ø8	4
80	3"	46	242	9x9	12.6	153	4-Ø19	160	8-Ø19	F05	65	50	4-Ø8	5
100	4"	52	280	11x11	15.77	191	8-Ø19	180	8-Ø19	F07	90	70	4-Ø10	6
125	5"	56	310	14x14	18.92	216	8-Ø22.4	210	8-Ø19	F07	90	70	4-Ø10	8
150	6"	56	340	14x14	18.92	242	8-Ø22.4	240	8-Ø23	F07	90	70	4-Ø10	9
200	8"	60	405	17x17	22.1	299	8-Ø22.4	295	12-Ø23	F10	125	102	4-Ø12	15
250	10"	68	481	22x22	28.45	362	12-Ø25.4	355	12-Ø28	F10	125	102	4-Ø12	17
300	12"	78	545	22x22	31.6	432	12-Ø25.4	410	12-Ø28	F10	125	102	4-Ø12	38

Materials

No.	DESCRIPTION	MATERIAL	STANDARD
1	Body	Ductile Iron	ASTM A 536 70-50-05 GGG50
2	Seat	EPDM	EPDM
3	Disc	Stainless Steel	CF8/CF8M
4	Shaft	Stainless Steel	SS420

All data, descriptions and pictures contained in this leaflet may be subject to change without prior notice.
European Casting Industry Srl | Via Morimondo, 26 - Building 17a | 20143 Milan MI, Italy | P.Iva: 03228761205
www.ecivalve.it | info@ecivalve.it